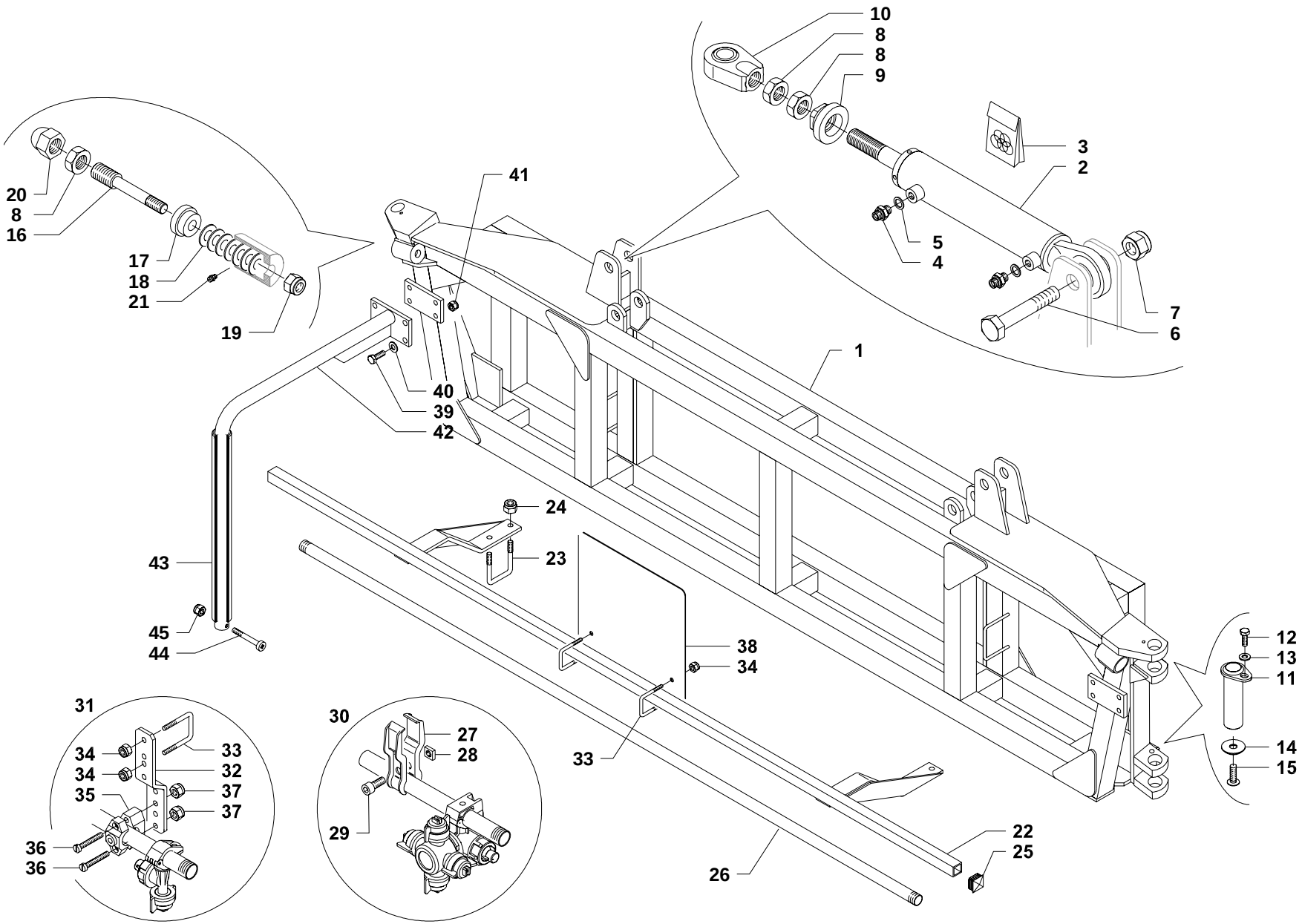

1	GGB22000001V	
2	GG702550026V	
3	GG996000189	
4	GG570500008Z	
5	GG600500001	
6	GG900324090Z	
7	GG905400024	
8	GG905200024Z	
9	GG500300025V	
10	GG920100034Z	
11	BG000024	
12	GG900110025Z	
13	GG907200010Z	
14	GG500400004Z	
15	GG900710025Z	
16	GG500100068Z	
17	GG500400016Z	
18	GG911634920	
19	GG905400016	
20	GG500500041Z	
21	GG919800020	
22	GG201800415V	
23	GG500500005Z	
24	GG905300010	
25	GG950130030	
26	GG550401500	4 fori / holes
26	GG550501500	5 fori / holes
27	GG500600002Z	
28	GG906000008Z	
29	GG900508022Z	
30	GG999900004	
31	GG999900100	
32	GG201800418V	
33	GG500500004Z	
34	GG905300006	
35	GGA00425130	
36	GG904506040X	
37	GG905400006X	
38	GG201800065V	
39	GG900110035Z	
40	GG907010021Z	
41	GG905400010	
42	GGB22400070V	
43	GG500100182	
44	GG904906035Z	