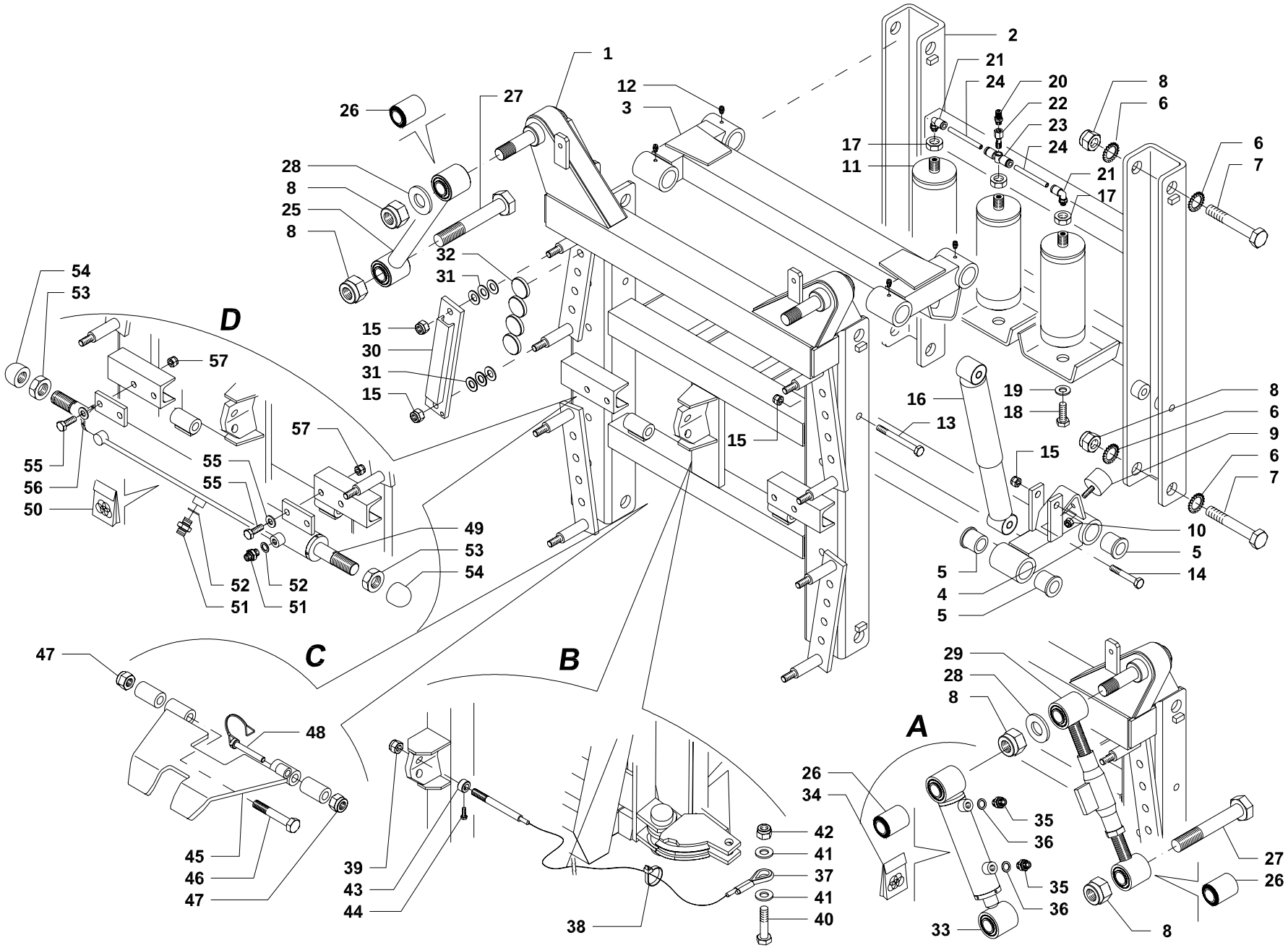

1	BG00153	
2	GG383800031V	
3	GG383800039V	
4	GG383800040V	
5	GG500200056	
6	GG907302025Z	
7	GG500500016Z	
8	GG905400024	
9	GG950200001	
10	GG905400008	
11	GG820200080	
12	GG919800020	
13	GG900312120Z	
14	GG900312070Z	
15	GG905400012	
16	GG820200101	
17	GG905500011	
18	GG90112025Z	
19	GG907112036Z	
20	GG820110100	
21	GG820110004	
22	GG820110003	
23	GG820110005	
24	GG 802001V	
25	GG993802001V	
26	GG950300002	
27	GG900324110Z	
28	GG500400019Z	
29	GG993802002Z	
30	GG993806003V	
31	GG911225915	
32	GG950200020	
A	***GG997000007***	
33	GG702540001V	
34	GG996000196	
35	GG570500006Z	
36	GG600500001	
B	***GG993820006***	
37	GG500700073	
38	GG919700120	
39	GG905300012	
40	GG900314060Z	
41	GG907014028Z	
42	GG905300014	
43	GG919800060Z	
44	GG900106010Z	
C	***GG993820015***	
45	GG363800025V	

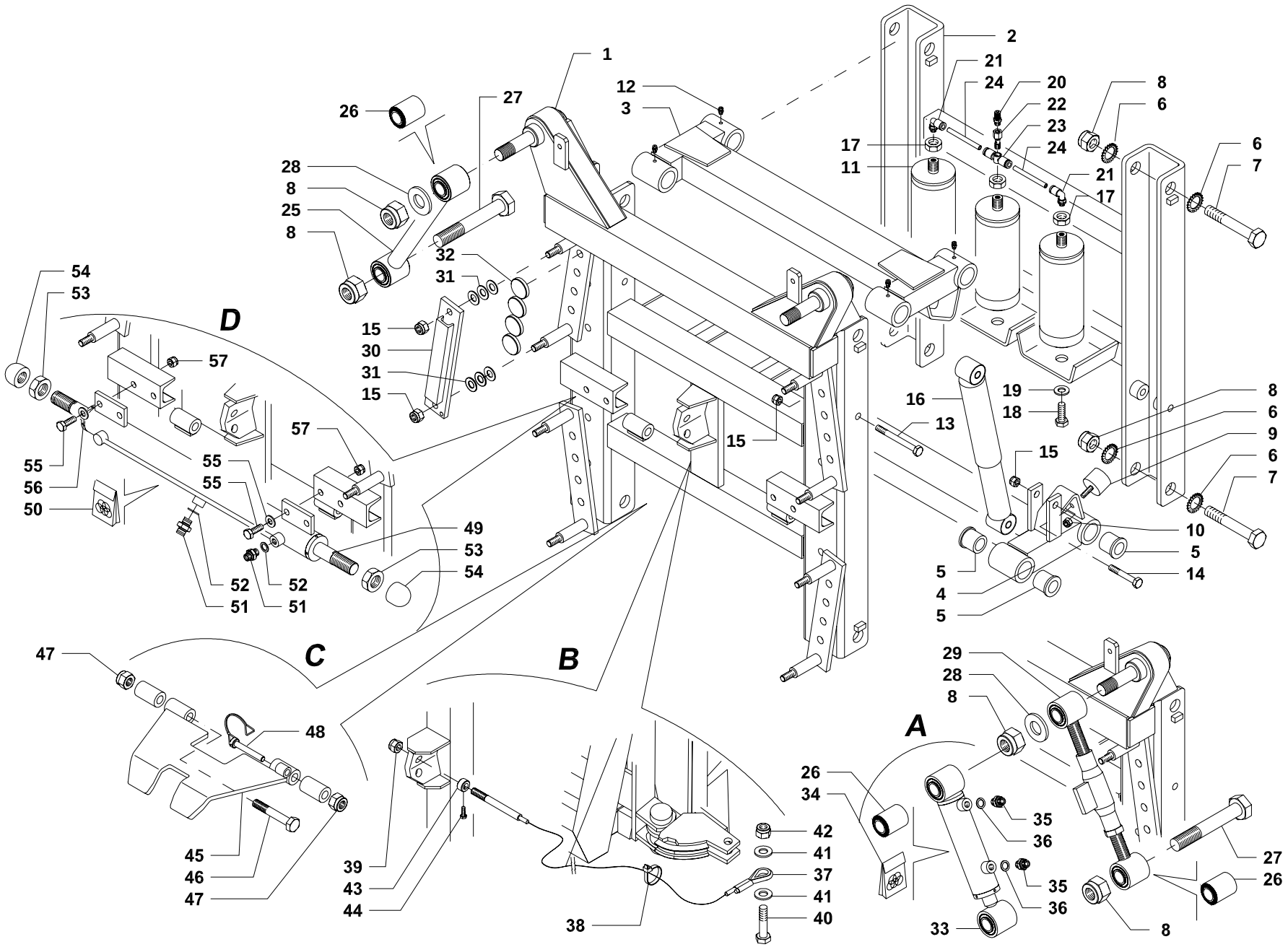

46	GG900316120Z	
47	GG905400016	
48	GG919800003Z	
D	***GG997000019***	
49	GG702540010V	
50	GG996000178	
51	GG570500011Z	
52	GG600500001	
53	GG905200022Z	
54	GG501100007	
55	GG900110035Z	
56	GG907010021Z	
57	GG905300010	