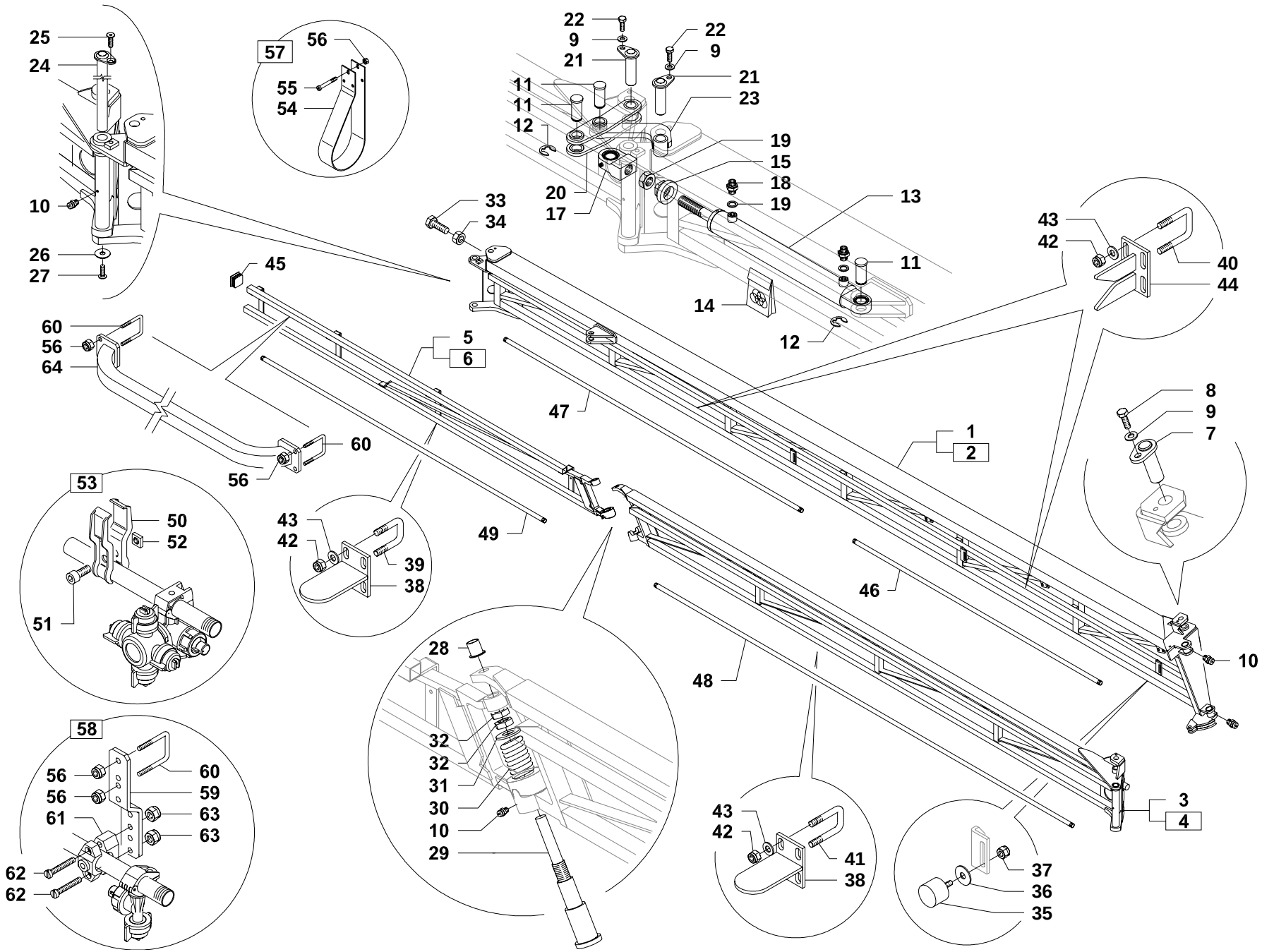

1	GGB22400020V	DX
2	GGB22400021V	SX
3	GGB22400050V	DX
4	GGB22400051V	SX
5	GG201600470V	DX
6	GG201600471V	SX
7	GG500100055V	
8	GG900110025Z	
9	GG907200010Z	
10	GG919800020	
11	GG500100148Z	
12	BG000187	
13	GG702550032V	
14	GG996000192	
15	GG500300025V	
16	GG905200024Z	
17	BG000158	
18	GG570500008Z	
19	GG600500001	
20	GGB22400036V	
21	GG500100110V	
22	GG900110020Z	
23	BG012002	
24	GG500100149V	
25	BG012007	
26	GG500400004Z	
27	GG900710025Z	
28	GG500200049	
29	GG500100111Z	
30	GG919900023Z	
31	GG500400019Z	
32	GG905200024Z	
33	GG900116050Z	
34	GG905100016Z	
35	GG950200001	
36	GG907108024Z	
37	GG905400008	
38	GG022400053V	
39	GG500500003Z	
40	GG500500001Z	
41	BG001457	
42	GG905400010	
43	GG907010021Z	
44	GG022400054V	
45	GG950130030	
46	GG550501500	
47	GG550501500	
48	GG550701500	
49	GG550501500	
50	GG500600002Z	

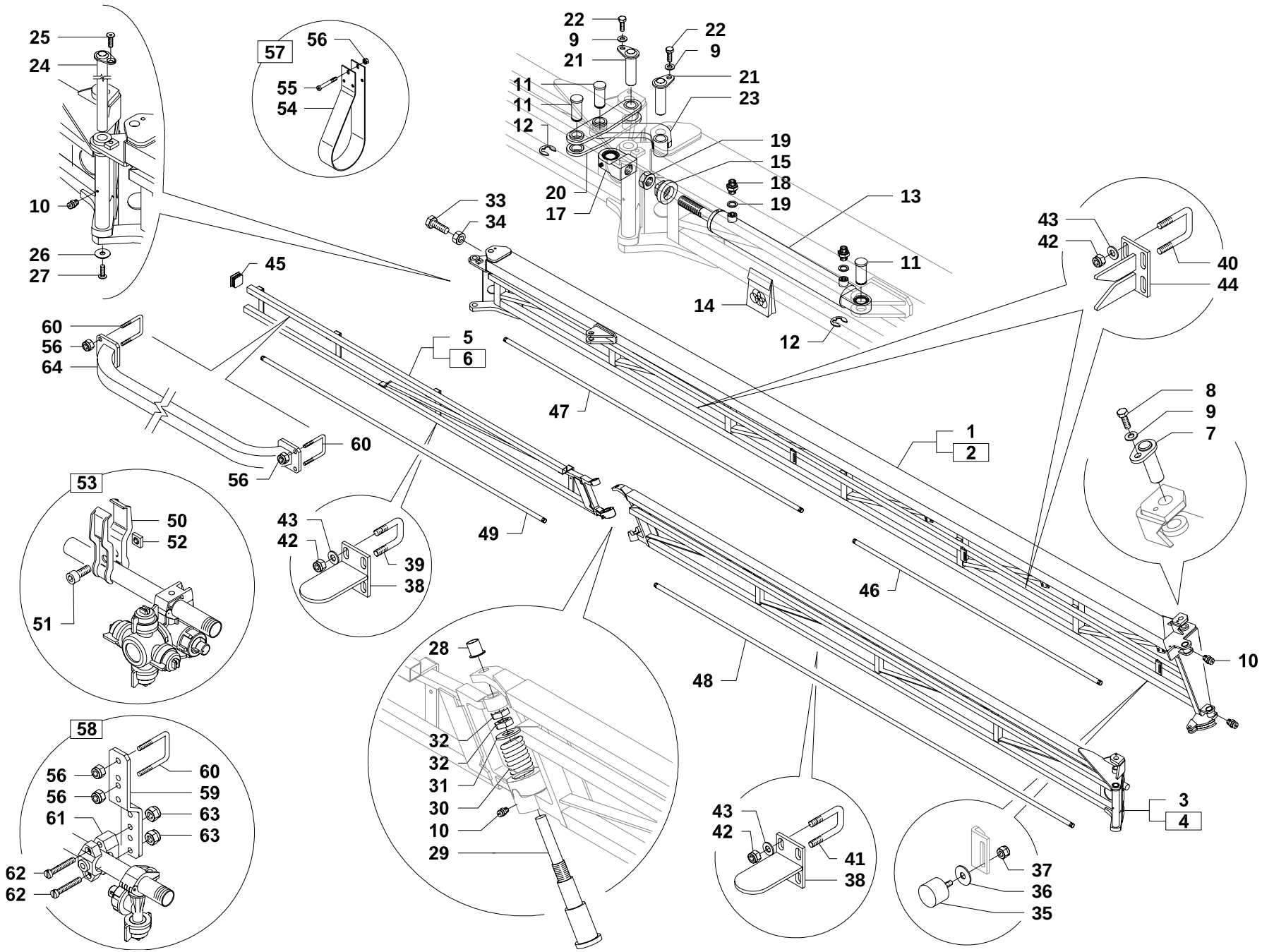

51	GG900508022Z
52	GG906000008Z
53	GG999900004Z
54	GG121200008Z
55	GG904906045Z
56	GG905300006
57	GG999900003Z
58	GG999900100
59	GG201800418V
60	GG500500004Z
61	GGA00425130
62	GG904506040X
63	GG905400006X
64	GGB22400073V