Pressure Regulator Section 463 control

463024 Standard electric controls (motor has yellow base)
463024S Bravo computer controls (motor has grey base)

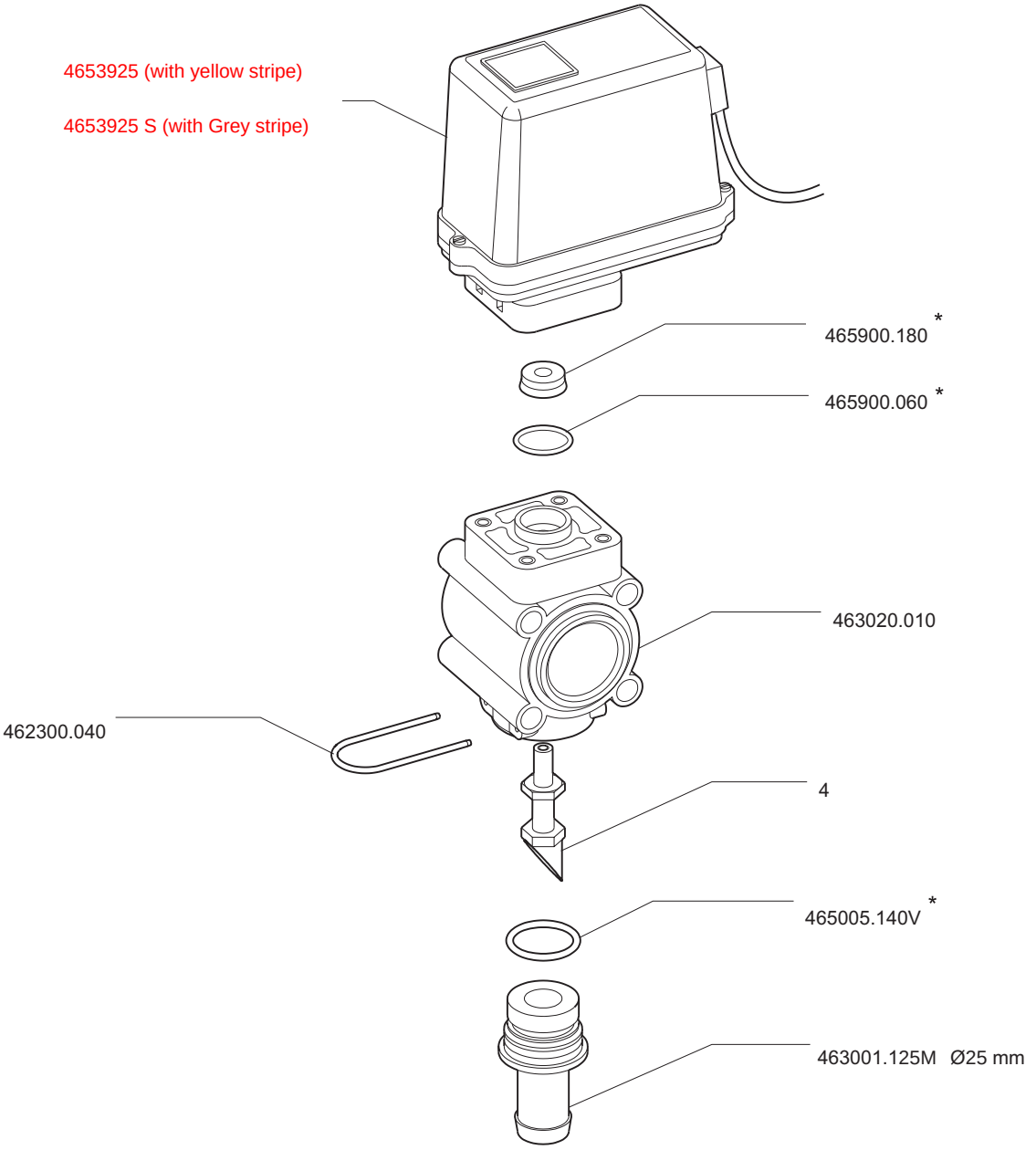

* =	463020.500	Serie guarnizioni Gasket-set