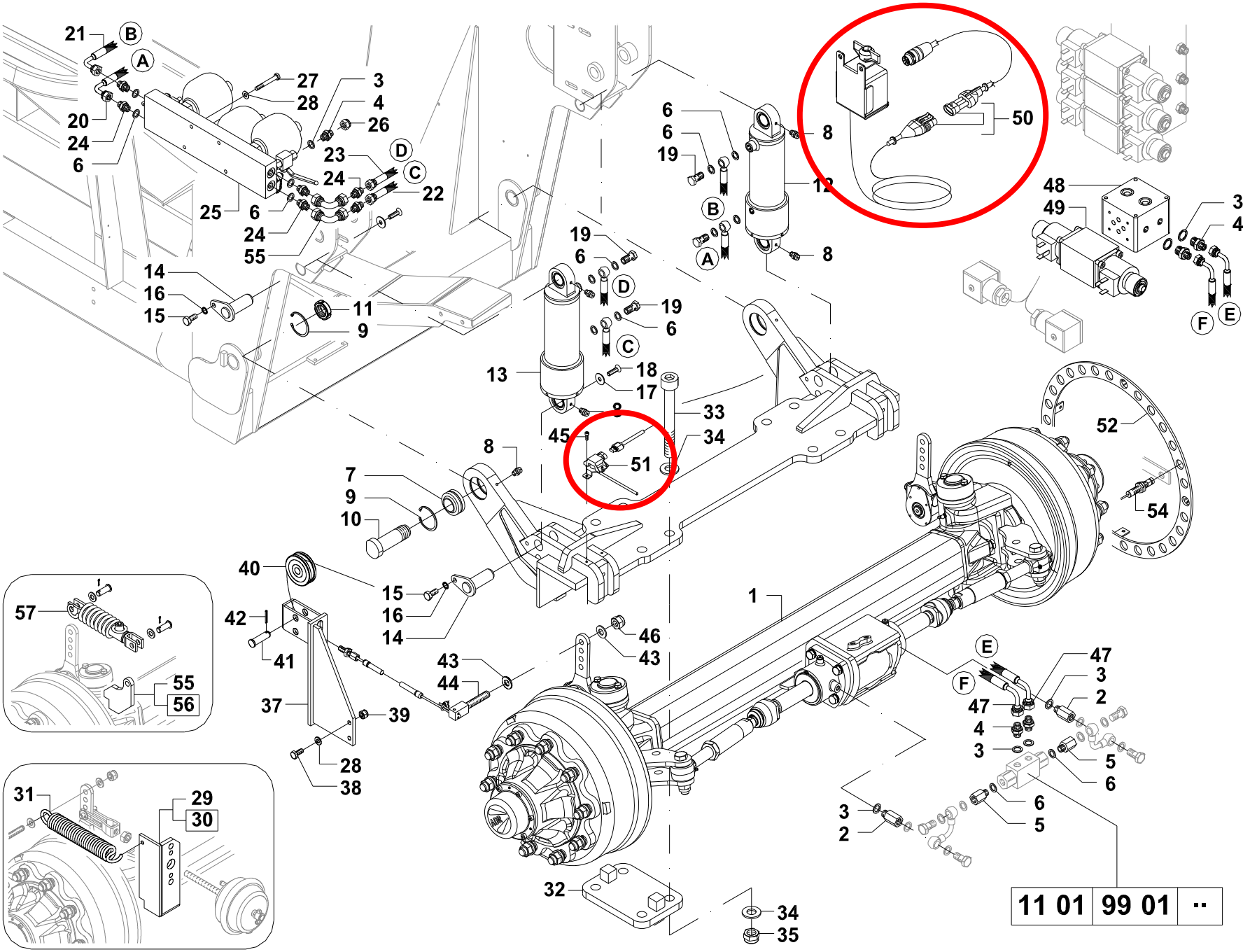

1	BG026044	
2	GG740000016Z	
3	BB50243113	
4	BB50223002	
5	GG740000012Z	
6	BB50243117	
7	GG920100062	
8	GG919800020	
9	GG919800038	
10	GG500100074V	
11	GG920100063Z	
12	BG008673	
13	BG008680	
14	GG500100141V	
15	GG900110020Z	
16	GG907200010Z	
17	GG500400004Z	
18	GG900710025Z	
19	BB50232103	
20	BG026697	
21	BG026698	
22	BG026699	
23	BG026700	
24	BB50223003	
25	BG008394	
26	BB50230001	
27	GG900308050Z	
28	GG907008017Z	
29	BG026723	sx
30	BG026722	dx
31	BG027052	
32	BG026054	
33	BG026282	
34	GG907025044Z	
35	GG905300024	
36	BG026695	
37	BG026696	
38	GG900108030Z	
39	GG905400008	
40	GG920100009	
41	GG919800007Z	
42	GG919800018Z	
43	GG907014028Z	
44	BG027480	
45	GG900106020Z	
46	GG905300014	
47	GG761128000	
48	BG015707	
49	BG021508	
50	BG024139	

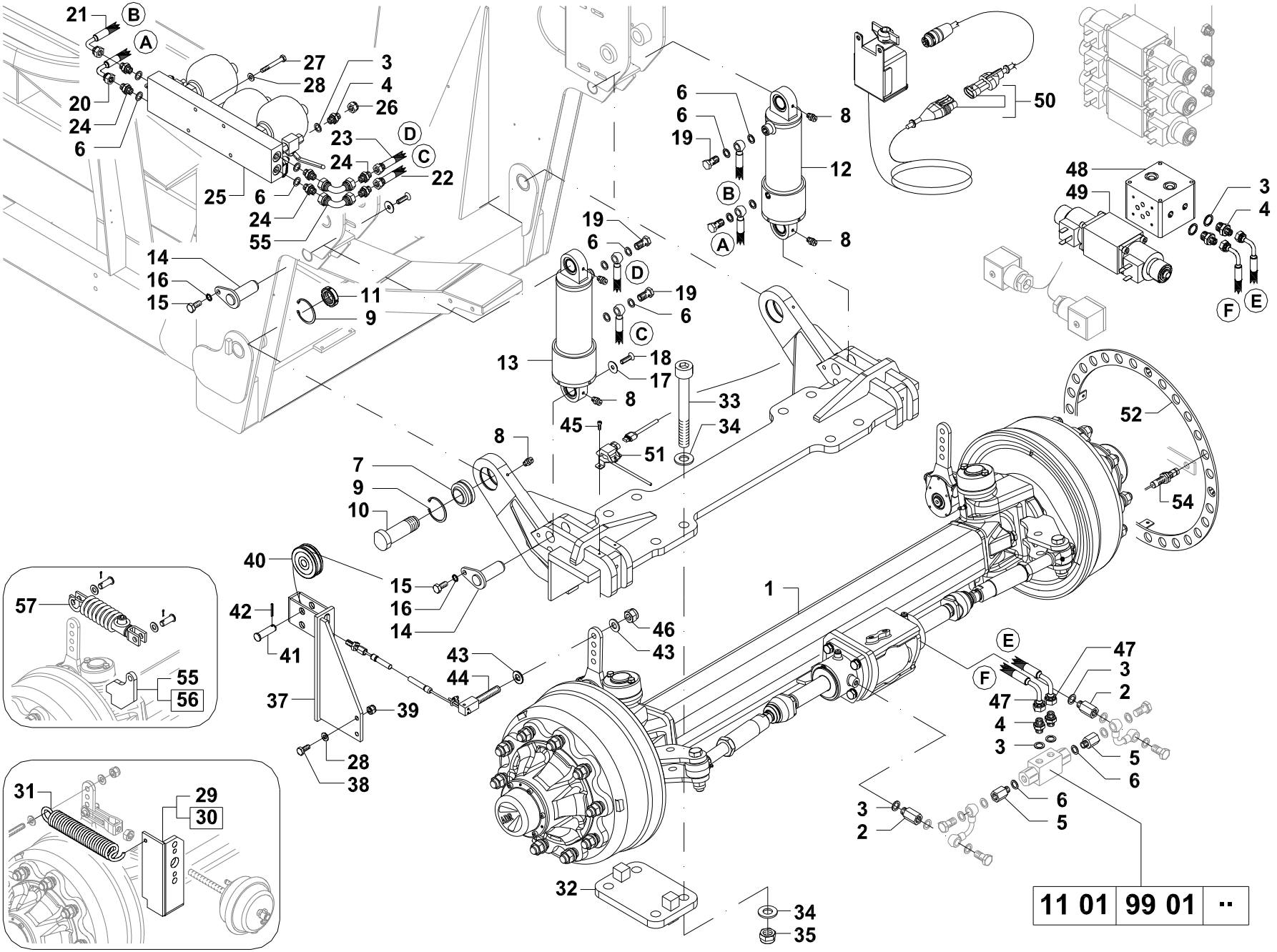

51	GG80030291405	
52	BG026999	
53	BG020742	
54	GG740000049Z	
55	BG026618	sx
56	BG026617	dx
57	BG026694	
58		

11 01 99 01 ··